1 5/16 Inch J-Hook Cable Support - Batwing Mount, Galvanized, 25 Pack

Networx SKU: **JH-301-131** | GTIN: 00845425035271 | 1 5/16 in. Batwing Mount | 25 Pack



The Networx® 1 5/16-inch J-Hook Cable Support with Batwing Mount carries structured cabling runs efficiently and at low cost. It attaches easily to ceiling wire or threaded rod with its batwing clip. The hook is made from 18-gauge galvanized steel with a zinc finish for durability and rust resistance, and its smooth edges hold cables at a proper bend radius without damaging them during the pull. It is a cost-effective alternative to ladder rack and cable tray for low-voltage cabling, and it is sold in packs of 25.

PRODUCT DIAGRAM

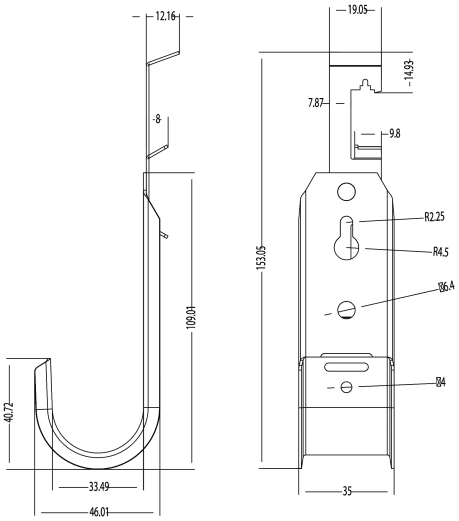

FACTORY DIMENSIONS (mm)

KEY FEATURES

- **Galvanized Steel:** 18-gauge galvanized steel with a zinc finish for durability and rust resistance.
- **Cable Friendly:** Smooth edges keep a proper bend radius and protect cables during installation.
- **Standards Ready:** Meets or exceeds EIA/TIA requirements for structured cabling systems.
- **Batwing Mount:** Batwing clip attaches easily to ceiling wire or threaded rod.
- **Versatile Support:** Carries CAT5e, CAT6 and CAT6A Ethernet, fiber optic, coaxial cable and conduit.
- **Cost Effective:** A low-cost alternative to ladder rack and cable tray, in packs of 25.

APPLICATIONS

- Open-ceiling and above-ceiling structured cabling runs
- Low-voltage security, AV and building systems cabling
- Horizontal cabling between telecom rooms and work areas
- Commercial, education and healthcare installations

TECHNICAL SPECIFICATIONS

Parameter	Specification
Nominal Diameter	1 5/16 in. (33 mm)
Mount Style	Batwing Mount
Attaches To	Ceiling wire or threaded rod
Material	18-gauge galvanized steel, zinc finish
Color	Silver
Rust Resistant	Yes
Compatible Cables	CAT5e, CAT6 and CAT6A Ethernet, fiber optic, coaxial cable and conduit
Compliance	Meets or exceeds EIA/TIA requirements for structured cabling systems
Pack Quantity	25 pieces
Dimensions	See factory drawing (mm)
GTIN	00845425035271

ORDERING INFORMATION

Networx® J-hooks come in four diameters and four mounting styles, 25 per pack. This sheet covers the highlighted SKU.

SKU	Diameter	Mount Style	GTIN
JH-101-075	3/4 in.	Standard Mount	00845425025111
JH-101-131	1 5/16 in.	Standard Mount	00845425035240
JH-101-200	2 in.	Standard Mount	00845425025128
JH-101-400	4 in.	Standard Mount	00845425025135
JH-201-075	3/4 in.	Ceiling Mount	00845425035257
JH-201-131	1 5/16 in.	Ceiling Mount	00845425035264
JH-201-200	2 in.	Ceiling Mount	00845425025142
JH-201-400	4 in.	Ceiling Mount	00845425025579
JH-301-075	3/4 in.	Batwing Mount	00845425033635
JH-301-131	**1 5/16 in.**	**Batwing Mount**	**00845425035271**
JH-301-200	2 in.	Batwing Mount	00845425033741
JH-301-400	4 in.	Batwing Mount	00845425033758
JH-401-075	3/4 in.	Beam Clamp	00845425035288
JH-401-131	1 5/16 in.	Beam Clamp	00845425035295
JH-401-200	2 in.	Beam Clamp	00845425035301
JH-401-400	4 in.	Beam Clamp	00845425035318

Networx® is a brand of NetConnex, LLC. Specifications subject to change without notice. © 2026 Networx.

1 5/16 Inch J-Hook Cable Support - Batwing Mount, Galvanized, 25 Pack

PRODUCT VIEWS

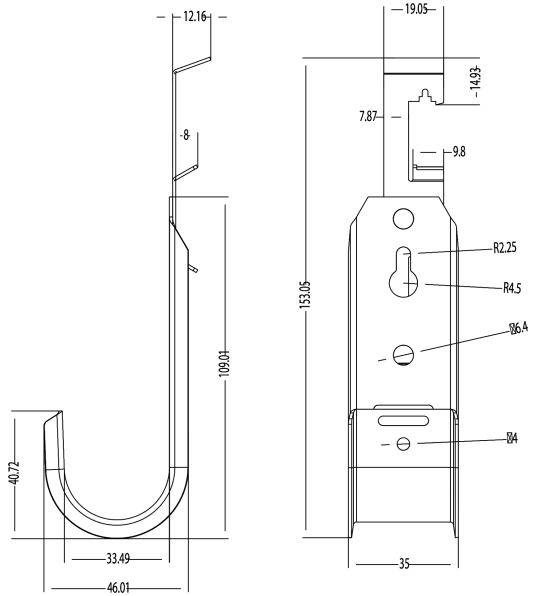

FACTORY DIMENSIONED VIEWS (mm)



PRODUCT

All dimensions in mm, taken from the factory drawings. Views not to scale.

BUILD SPECIFICATIONS

DIMENSIONS (FACTORY)

Nominal Diameter	1 5/16 in. (33 mm)
Detail Dimensions	Per factory drawing, mm

CONSTRUCTION

Material	18-gauge galvanized steel
Finish	Zinc
Color	Silver
Rust Resistant	Yes
Edges	Smooth, maintain cable bend radius

MOUNTING

Mount Style	Batwing Mount
Attaches To	Ceiling wire or threaded rod

APPLICATION

Cable Types	CAT5e, CAT6 and CAT6A Ethernet, fiber optic, coaxial cable and conduit
Compliance	Meets or exceeds EIA/TIA requirements for structured cabling

PACKAGING

Pack Quantity	25 pieces

Networx® is a brand of NetConnex, LLC. Specifications subject to change without notice. © 2026 Networx.