# 3/4 Inch J-Hook Cable Support - Standard Mount, Galvanized, 25 Pack

Networx SKU: **JH-101-075** | GTIN: 00845425025111 | 3/4 in. Standard Mount | 25 Pack



The Networx® 3/4-inch J-Hook Cable Support with Standard Mount carries structured cabling runs efficiently and at low cost. It fastens directly to walls, studs, joists and other flat surfaces. The hook is made from 18-gauge galvanized steel with a zinc finish for durability and rust resistance, and its smooth edges hold cables at a proper bend radius without damaging them during the pull. It is a cost-effective alternative to ladder rack and cable tray for low-voltage cabling, and it is sold in packs of 25.

## PRODUCT DIAGRAM

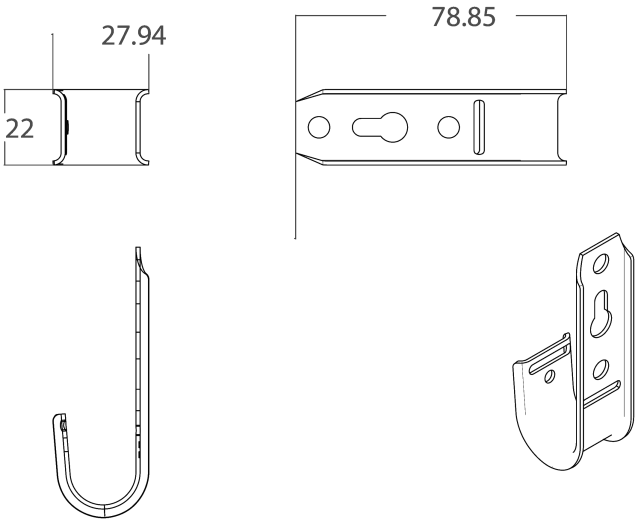


FACTORY DIMENSIONS (mm)

## KEY FEATURES

- **Galvanized Steel:** 18-gauge galvanized steel with a zinc finish for durability and rust resistance.
- **Cable Friendly:** Smooth edges keep a proper bend radius and protect cables during installation.
- **Standards Ready:** Meets or exceeds EIA/TIA requirements for structured cabling systems.
- **Standard Mount:** Fastens directly to walls, studs, joists and other flat surfaces through the keyhole and mounting holes.
- **Versatile Support:** Carries CAT5e, CAT6 and CAT6A Ethernet, fiber optic, coaxial cable and conduit.
- **Cost Effective:** A low-cost alternative to ladder rack and cable tray, in packs of 25.

## APPLICATIONS

- Open-ceiling and above-ceiling structured cabling runs
- Low-voltage security, AV and building systems cabling
- Horizontal cabling between telecom rooms and work areas
- Commercial, education and healthcare installations

## TECHNICAL SPECIFICATIONS

| Parameter | Specification |
|---|---|
| Nominal Diameter | 3/4 in. (19 mm) |
| Mount Style | Standard Mount |
| Attaches To | Walls, studs, joists and other flat surfaces |
| Material | 18-gauge galvanized steel, zinc finish |
| Color | Silver |
| Rust Resistant | Yes |
| Compatible Cables | CAT5e, CAT6 and CAT6A Ethernet, fiber optic, coaxial cable and conduit |
| Compliance | Meets or exceeds EIA/TIA requirements for structured cabling systems |
| Pack Quantity | 25 pieces |
| Dimensions | See factory drawing (mm) |
| GTIN | 00845425025111 |

## ORDERING INFORMATION

Networx® J-hooks come in four diameters and four mounting styles, 25 per pack. This sheet covers the highlighted SKU.

| SKU | Diameter | Mount Style | GTIN |
|---|---|---|---|
| **JH-101-075** | **3/4 in.** | **Standard Mount** | **00845425025111** |
| JH-101-131 | 1 5/16 in. | Standard Mount | 00845425035240 |
| JH-101-200 | 2 in. | Standard Mount | 00845425025128 |
| JH-101-400 | 4 in. | Standard Mount | 00845425025135 |
| JH-201-075 | 3/4 in. | Ceiling Mount | 00845425035257 |
| JH-201-131 | 1 5/16 in. | Ceiling Mount | 00845425035264 |
| JH-201-200 | 2 in. | Ceiling Mount | 00845425025142 |
| JH-201-400 | 4 in. | Ceiling Mount | 00845425025579 |
| JH-301-075 | 3/4 in. | Batwing Mount | 00845425033635 |
| JH-301-131 | 1 5/16 in. | Batwing Mount | 00845425035271 |
| JH-301-200 | 2 in. | Batwing Mount | 00845425033741 |
| JH-301-400 | 4 in. | Batwing Mount | 00845425033758 |
| JH-401-075 | 3/4 in. | Beam Clamp | 00845425035288 |
| JH-401-131 | 1 5/16 in. | Beam Clamp | 00845425035295 |
| JH-401-200 | 2 in. | Beam Clamp | 00845425035301 |
| JH-401-400 | 4 in. | Beam Clamp | 00845425035318 |

Networx® is a brand of NetConnex, LLC. Specifications subject to change without notice. © 2026 Networx.

# 3/4 Inch J-Hook Cable Support - Standard Mount, Galvanized, 25 Pack

## PRODUCT VIEWS

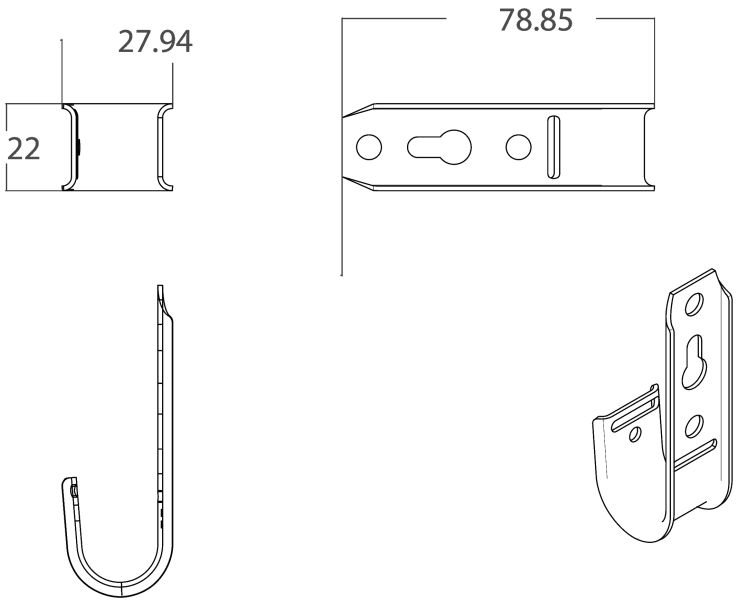


FACTORY DIMENSIONED VIEWS (mm)



PRODUCT

*All dimensions in mm, taken from the factory drawings. Views not to scale.*

## BUILD SPECIFICATIONS

### DIMENSIONS (FACTORY)

| | |
|---|---|
| Nominal Diameter | 3/4 in. (19 mm) |
| Detail Dimensions | Per factory drawing, mm |

### CONSTRUCTION

| | |
|---|---|
| Material | 18-gauge galvanized steel |
| Finish | Zinc |
| Color | Silver |
| Rust Resistant | Yes |
| Edges | Smooth, maintain cable bend radius |

### MOUNTING

| | |
|---|---|
| Mount Style | Standard Mount |
| Attaches To | Walls, studs, joists and other flat surfaces |

### APPLICATION

| | |
|---|---|
| Cable Types | CAT5e, CAT6 and CAT6A Ethernet, fiber optic, coaxial cable and conduit |
| Compliance | Meets or exceeds EIA/TIA requirements for structured cabling |

### PACKAGING

| | |
|---|---|
| Pack Quantity | 25 pieces |



Networx® is a brand of NetConnex, LLC. Specifications subject to change without notice. © 2026 Networx.